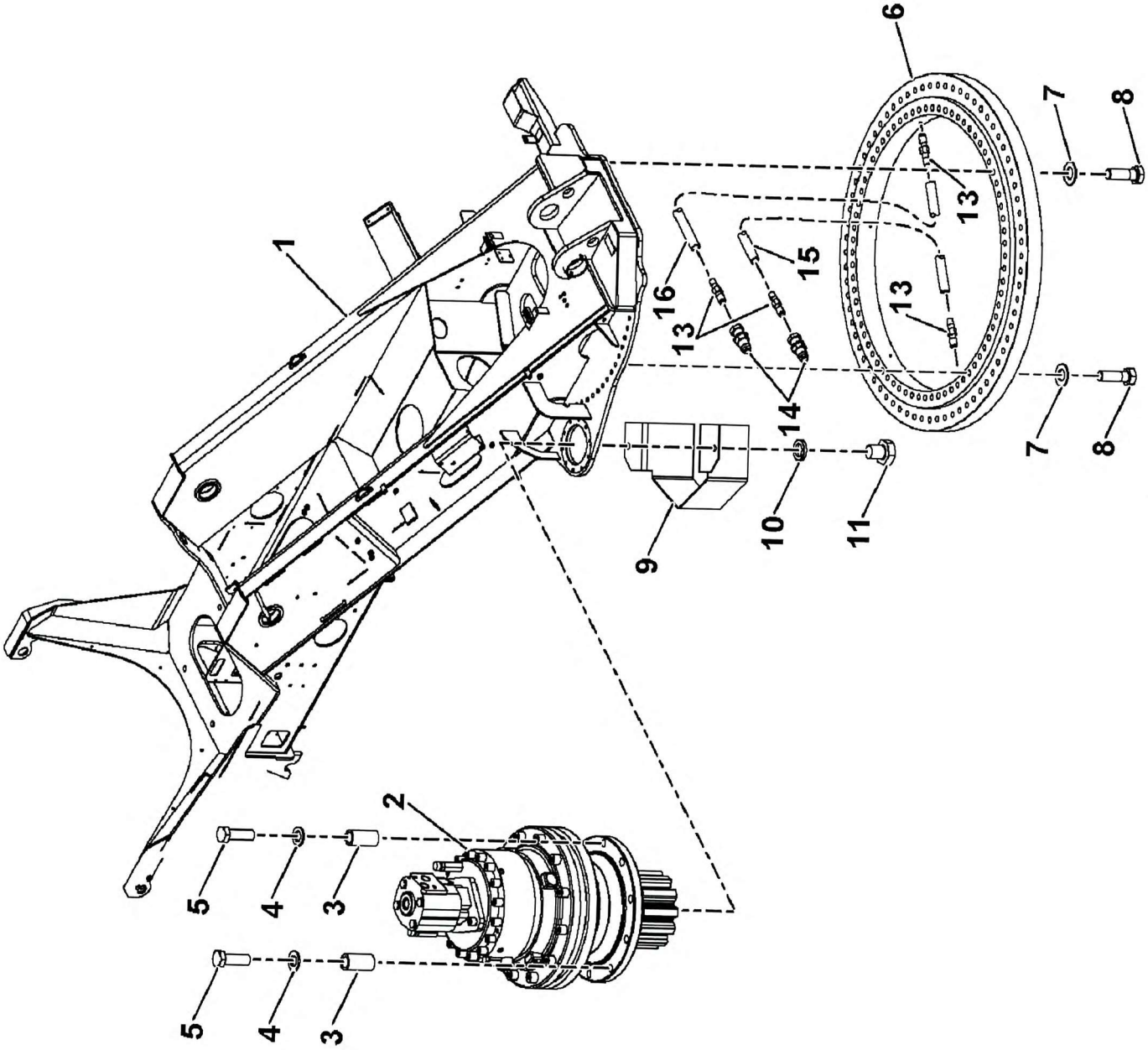

80023920

(SHEET 1 OF 1)